Boiler Construction, Pressure Parts & Drum Internals

steag

Objectives and other details of modules

steag

Duration – 75 minutes

Training aids

Power point Presentations

Reading Material

Objective

At the end of the session participants will be able to:

- **Describe essential parts of boiler and their functions**
- **List out design criteria of various pressure parts and furnace, material of construction**
- **Detail out of steam separation principles drum and its function contraction details of boiler drum**
- **Distinguish between boilers for subcritical and supercritical units**

Boiler Construction

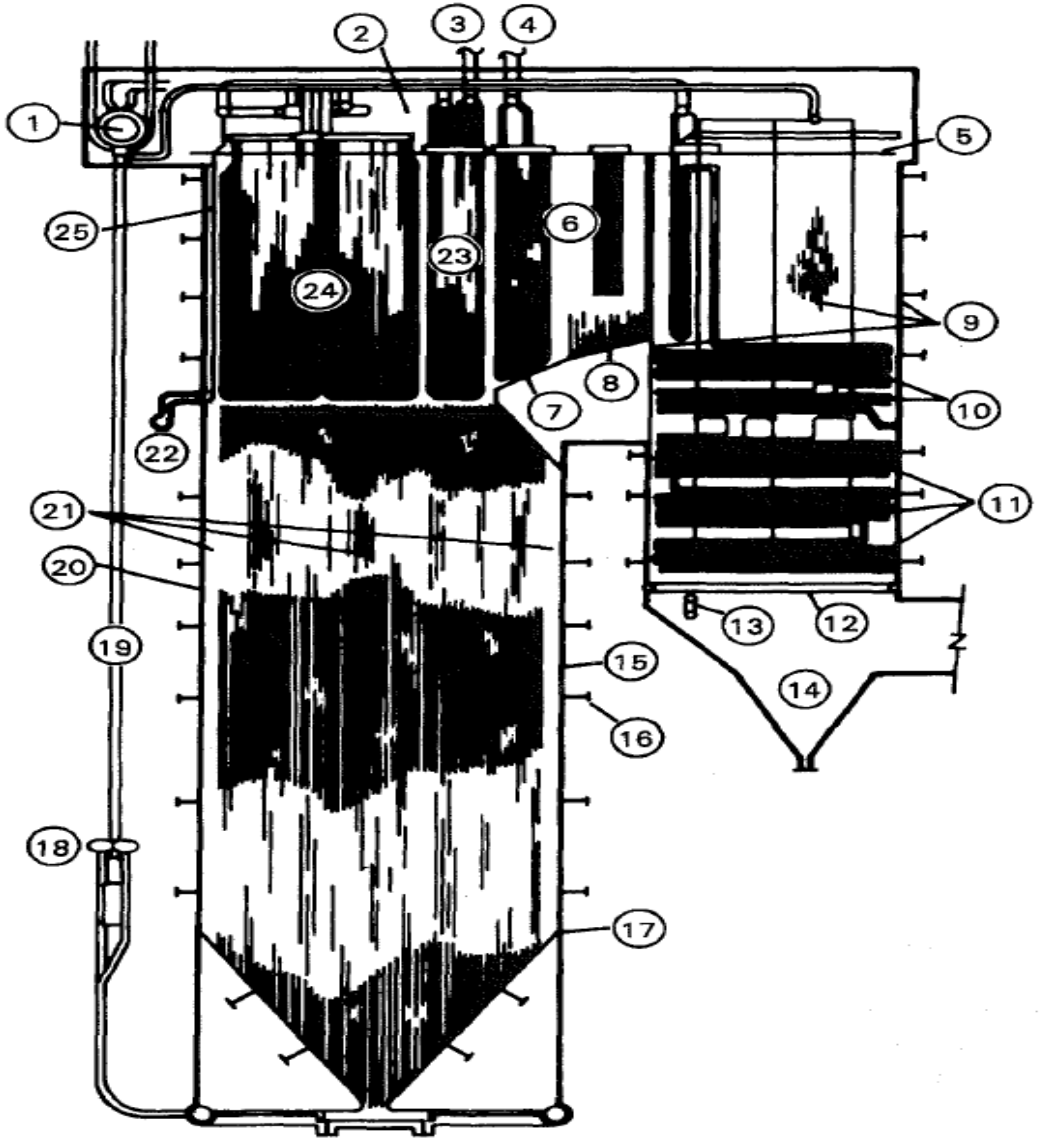

1 STEAM DRUM
2 PENTHOUSE
3 SUPERHEATER OUTLET
4 REHEATER OUTLET
5 STEAM-COOLED ROOF
6 PENDANT CONVECTION SUPERHEATER OR REHEATER
7 FURNACE NOSE
8 FURNACE ARCH
9 STEAM-COOLED WALLS
10 HORIZONTAL CONVECTION SUPERHEATER OR REHEATER
11 ECONOMIZER
12 SUPERHEATER JUNCTION HEADER
13 ECONOMIZER INLET HEADER
14 ECONOMIZER ASH HOPPER
15 REAR WALL
16 BUCKSTAYS
17 FURNACE KNUCKLE
18 BOILER CIRCULATING PUMPS
19 DOWNCOMER
20 FRONT WALL
21 FURNACE WATER-COOLED WALLS
22 REHEATER INLET HEADER
23 PLATEN TYPE SUPERHEATER OR REHEATER
24 PANEL TYPE SUPERHEATER
25 RADIANT WALL REHEATER

Pressure Parts arrangement

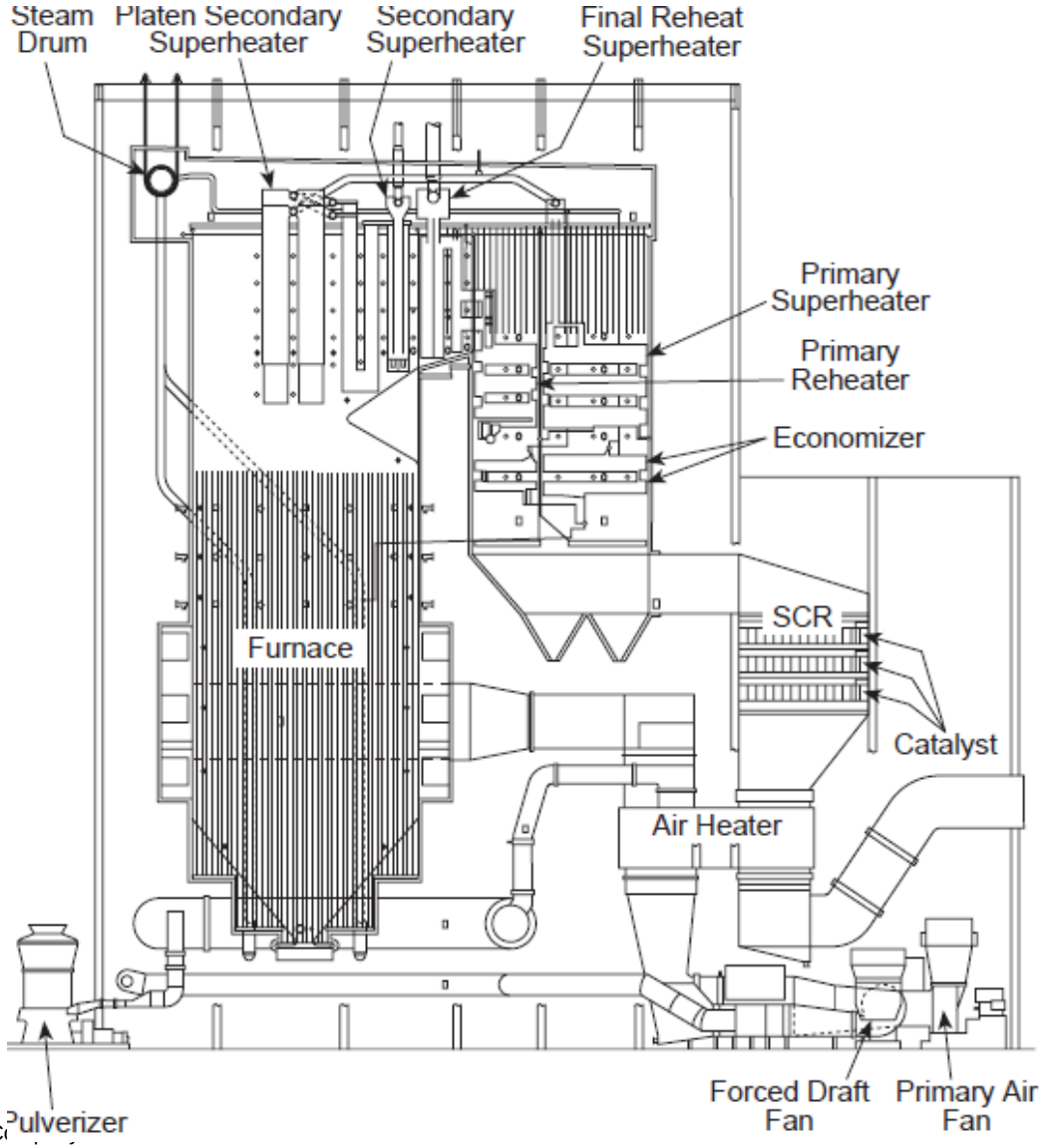

Furnace design aspects

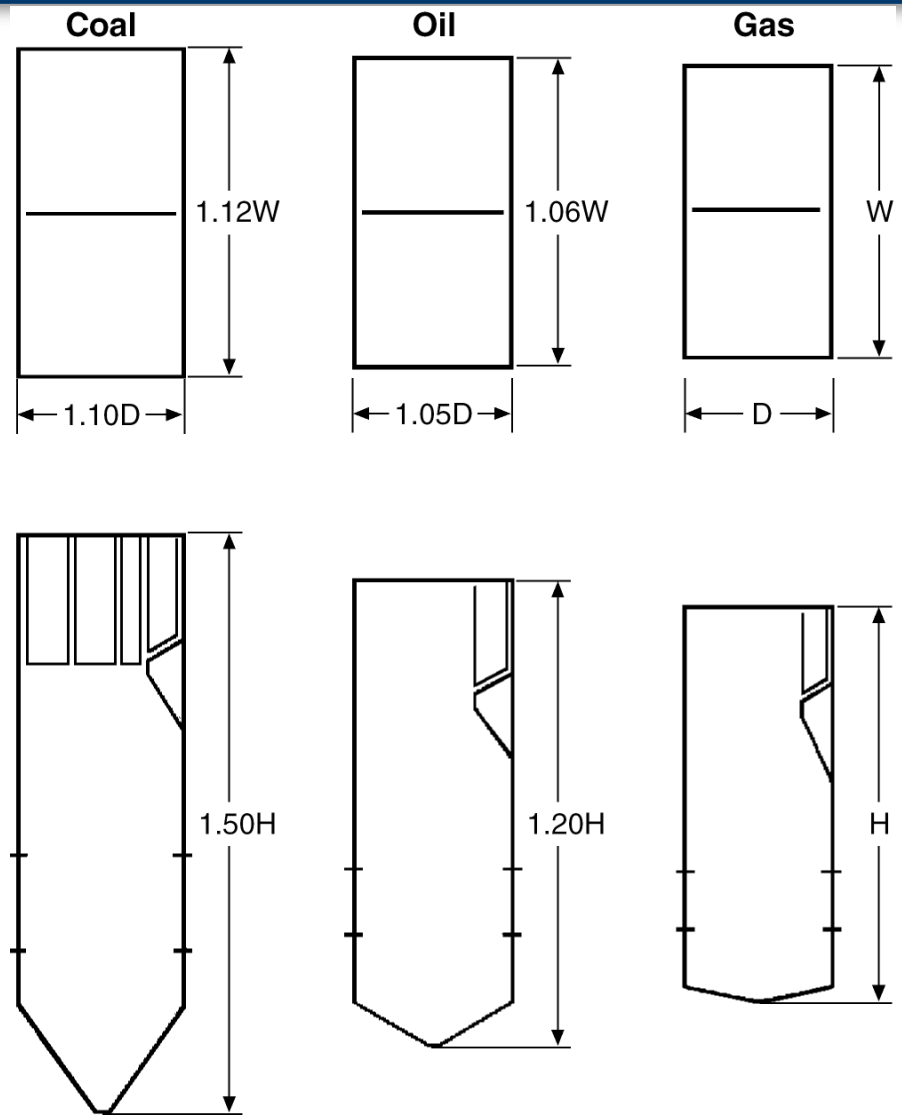

This closeness in size reflects the fact that a coal-fired unit has to be designed to prevent excessive slagging, whereas an oil-fired unit has to take into account, as a primary sizing factor, its furnace tube-wall integrity

Furnace Design Considerations

steag

Important design considerations for the proper sizing of the furnace include **Net-heat-input-to-plan-area (NHI/PA) release rate**. As the rank of coal decreases, furnaces increase in plan area and vertical height from the top fuel nozzle to the furnace arch.
The NHI/PAs range from (1.6 x 109 J/hr-929 cm2) for severe slagging coals, through (2.2 x 109 J/hr-929 cm2) for low slagging coals

Distance from the upper fuel nozzle level to the furnace exit. Sufficient furnace dimensions, including adequate height between the top row of burners and the furnace exit, must be used to obtain the proper retention time for the combustion.

Furnace exit gas temperature (FEGT). Sufficient waterwall heat transfer surface is necessary to allow sufficient cooling of the combustion gas so that the fly ash is solidified before it enters the first pendant tube bank.
This will minimize deposition and fouling of the pendant tube banks.

The **velocity of the flue gas** must not exceed specified limits in order to control erosion from the ash in the coal. Depending on the ash analysis and quantity, the velocity is generally limited to (18.3 to 21.3 m/s).

Furnace Sizing

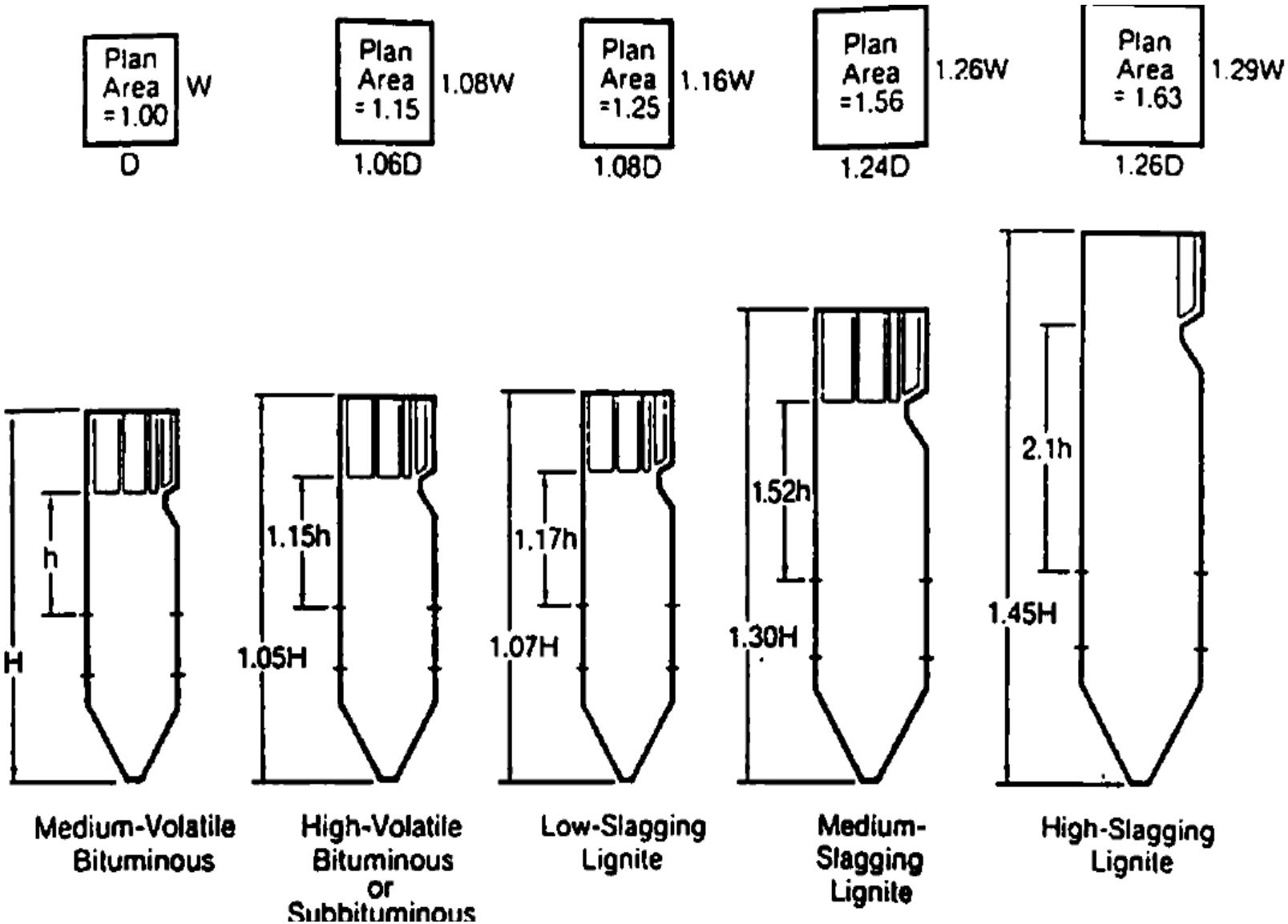

500MW construction details

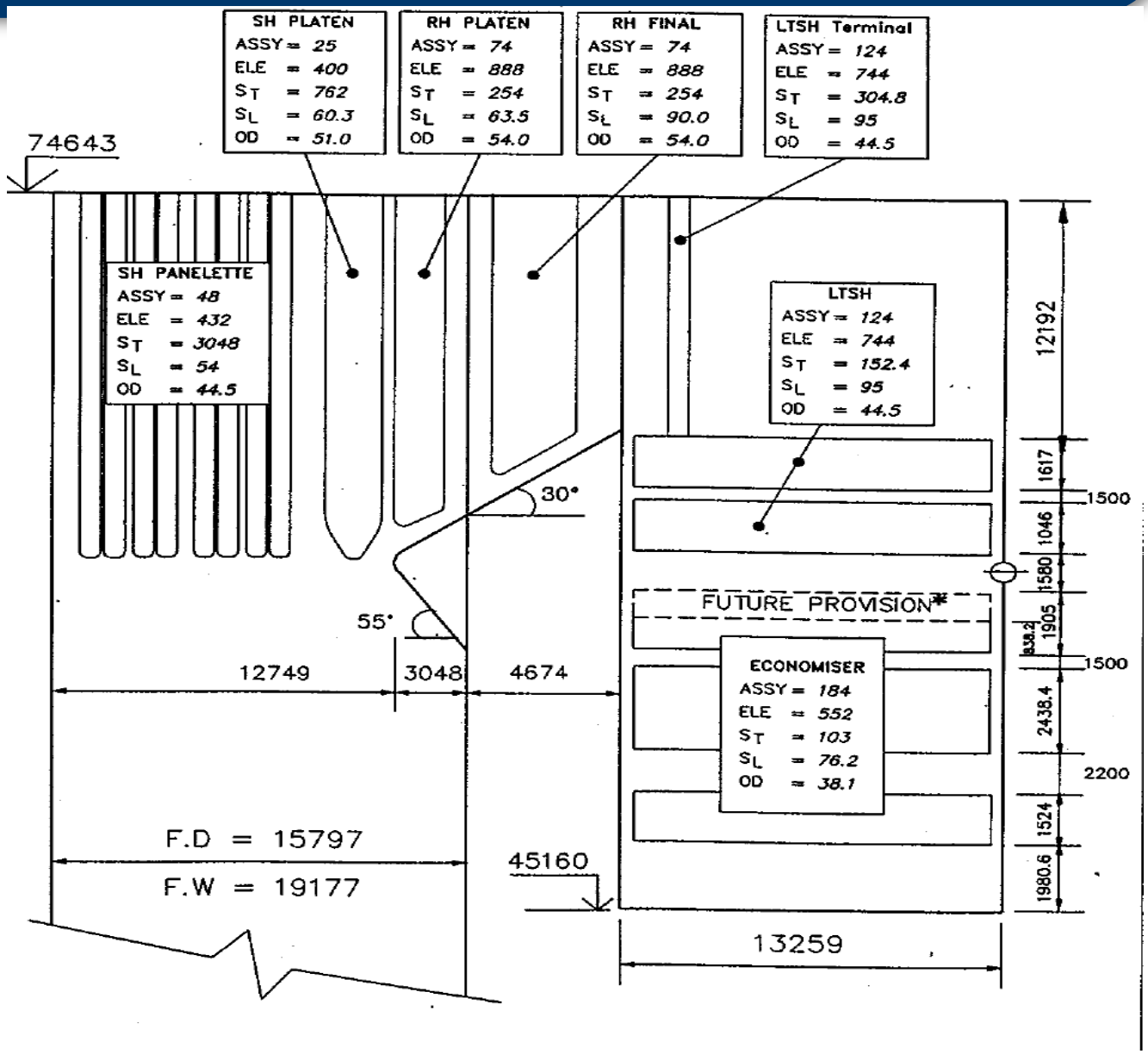

Boiler materials Consideration

steag

The primary consideration in material choice is a function of expected tube temperature of operation.

Economizers and water wall sections are usually constructed with a mild or medium carbon steel, whereas

low alloy ferritic steels are used for most super heater and re heater sections, with austenitic stainless steels specified for the highest-temperature circuits or corrosion performance.

Alloys for use as boiler tube materials in the United States are identified by an ASME designation (SA-xxx) or an essentially equivalent

Materials for Boiler

steag

Class of Material	Typical Alloy Designations	General Properties
Carbon steel	SA-178: Welded carbon steel SA-192: Seamless carbon-silicon steel SA-210: Seamless carbon-silicon steel	Hypoeutectoid steels. Mild corrosion resistance. Moderate strength up to 1000°F (538°C).
Carbon-molybdenum	SA-209-T1, T1a, and T1b: Seamless carbon-1/2 molybdenum steel SA-250-T1: Welded carbon - 1/2 molybdenum steel	Greater creep strength than carbon steels. Susceptible to graphitization with prolonged exposure above 875°F (468°C).
Chromium-molybdenum steel	SA-213-T2: Seamless 1/2 chromium - 1/2 molybdenum steel SA-213-T12: Seamless 1 Cr - 1/2 Mo steel SA-213-T11: Seamless 1-1/4 Cr - 1 Mo steel SA-213-T22: Seamless 2-1/4 Cr - 1 Mo steel SA-213-T21: Seamless 3 Cr- 1/2 Mo steel SA-213-T5: Seamless 5 Cr - 1/2 Mo steel SA-213-T5b: Seamless 5 Cr - 1/2 Mo steel SA-213-T5c: Seamless 5 Cr - 1/2 Mo steel SA-213-T7: Seamless 7 Cr - 1/2 Mo steel SA-213-T9: Seamless 9 Cr - 1 Mo steel SA-213-T91: Seamless 9 Cr - 1 Mo steel 1/2 V-X(Cb/N/Ni/Al) steel	Most common boiler tube materials (particularly T22 and T11). Each increase in Cr content yields improved properties, particularly higher strength creep properties, and improved corrosion resistance. Resistant to graphitization.

Boiler drum and steam separation

Steam Generation

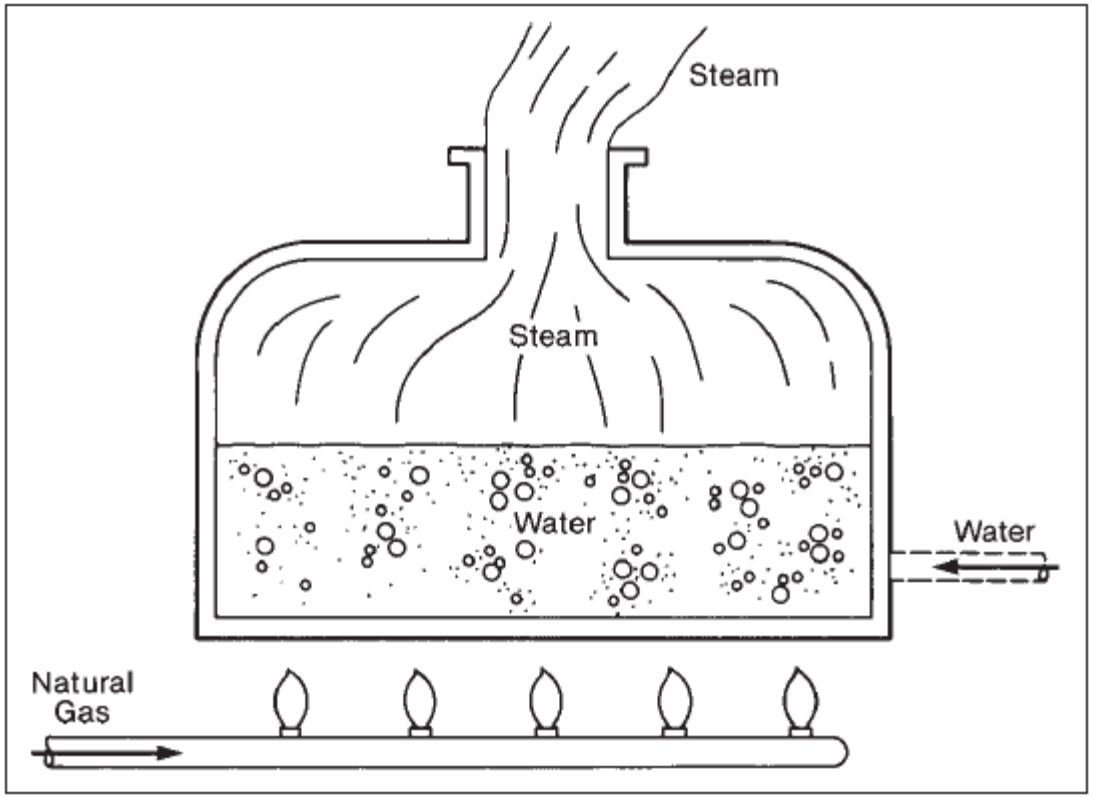

Steam Generation

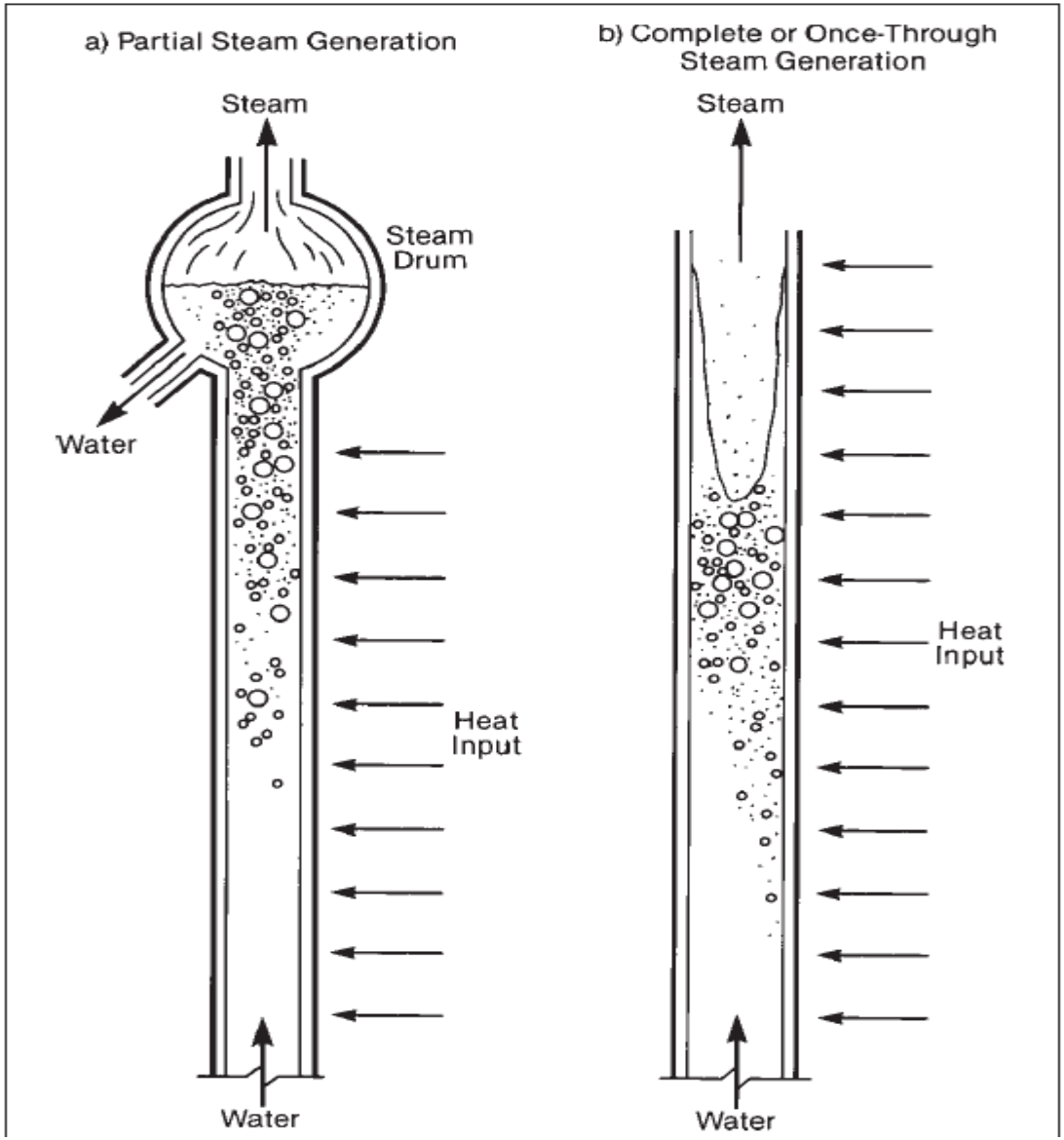

Steam Separation

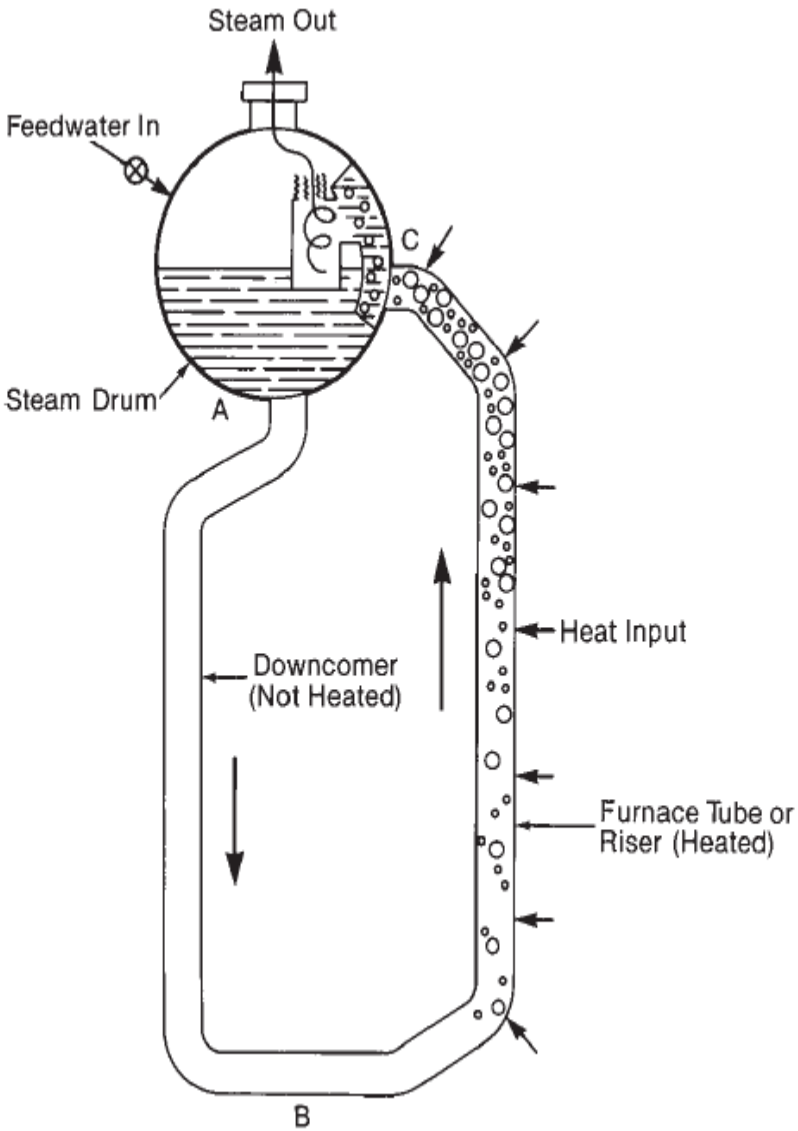

(a) Simple Natural or Thermal Circulation Loop

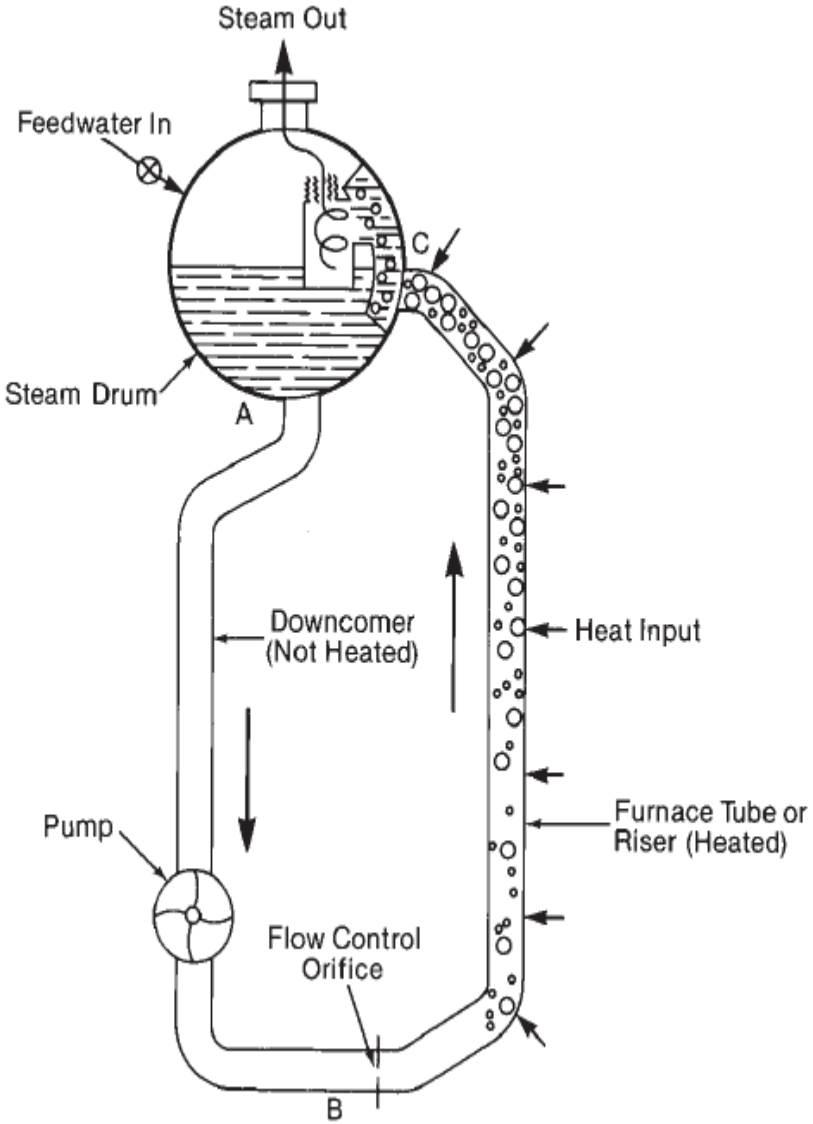

(b) Simple Forced or Pumped Circulation Loop

Boiler steam water schemes

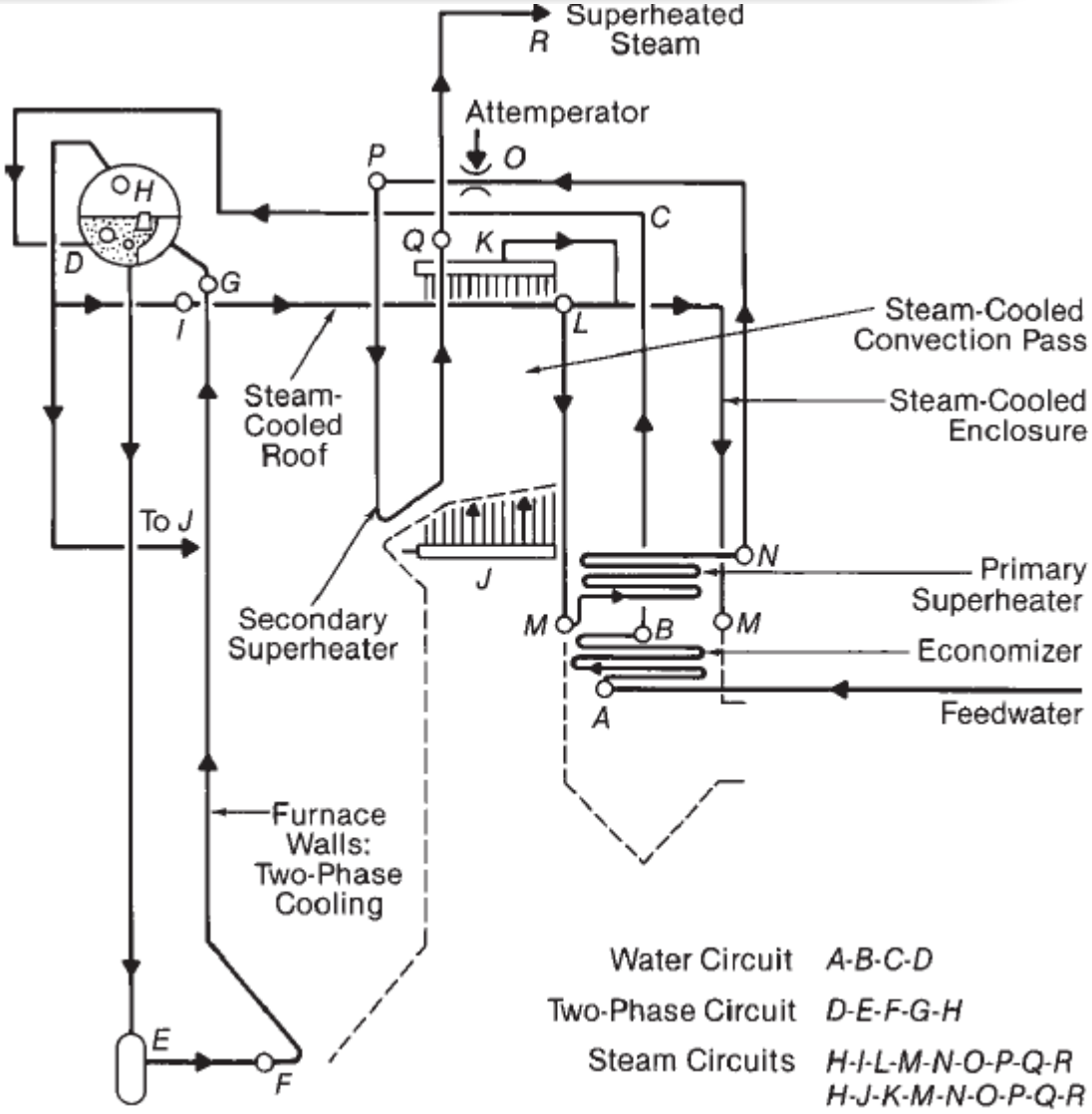

Heat Transfer in a pipe

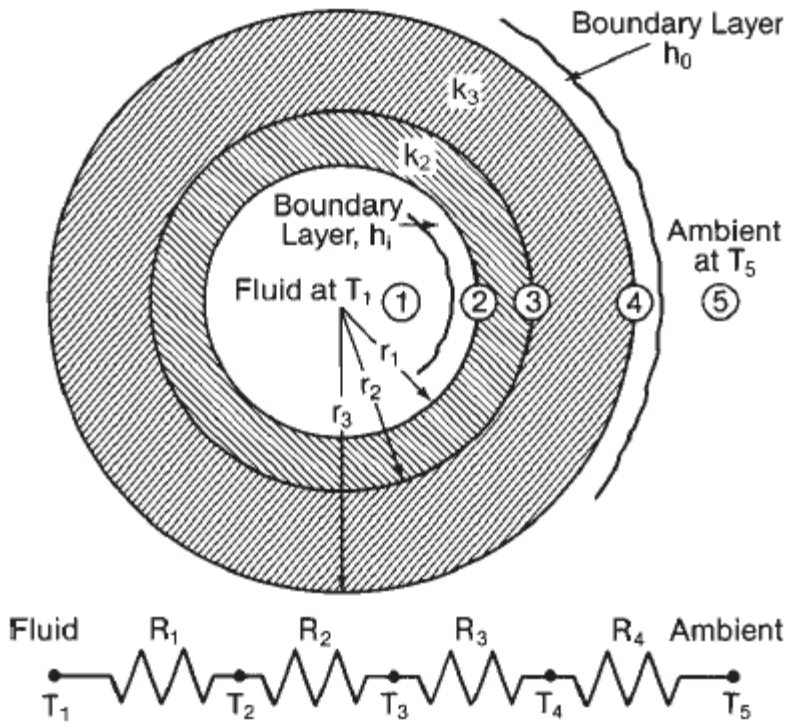

Common Circulation systems

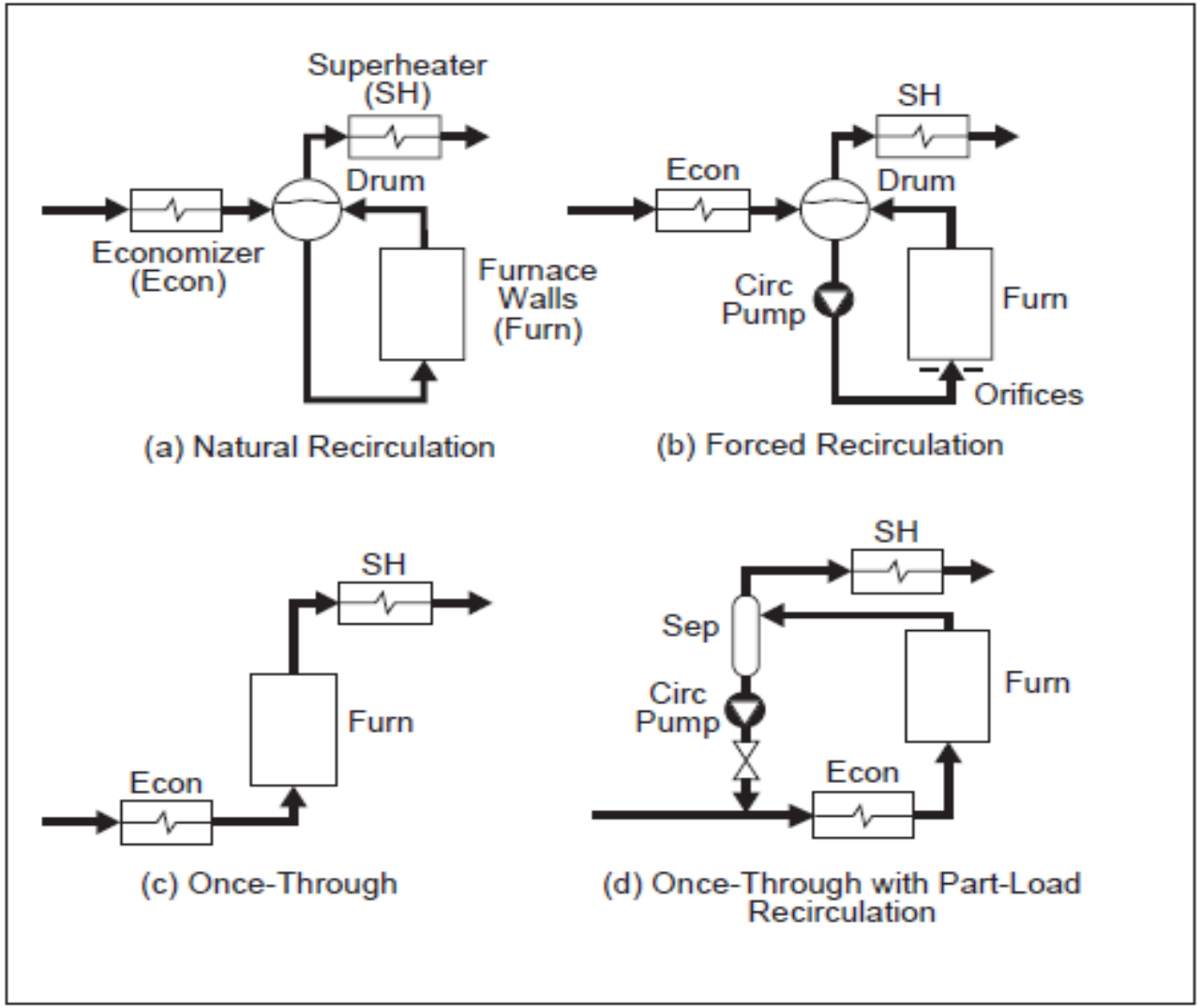

Boiler Drum and internals

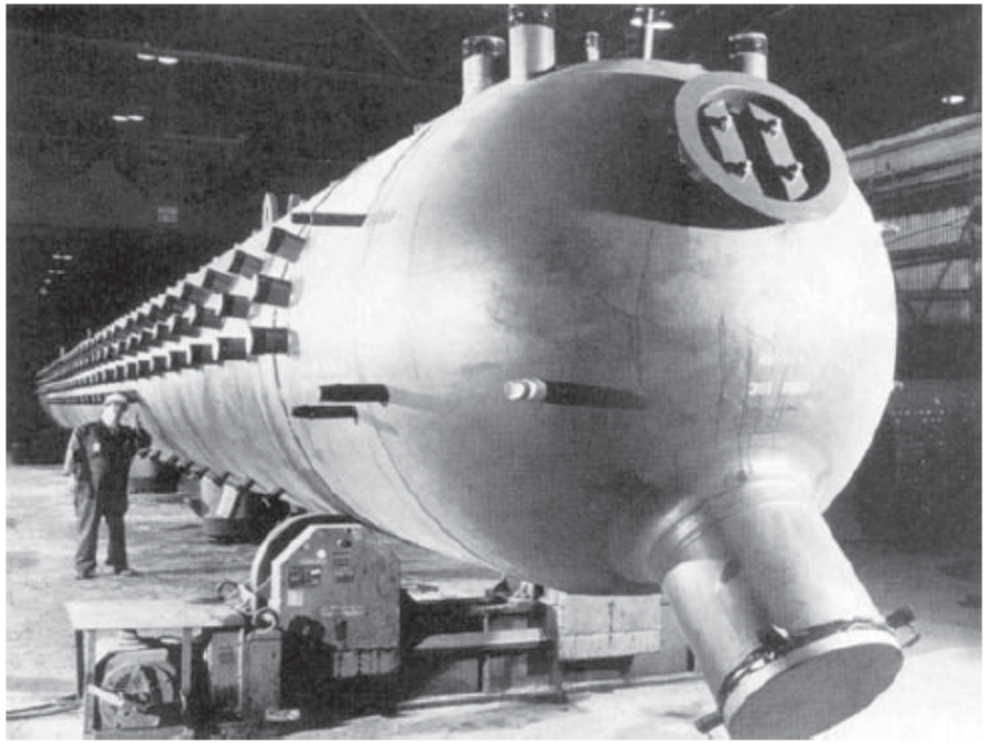

Drum design criteria

$$t = \frac{PR}{SE - 0.6P}$$

t = minimum required wall thickness, in.
P = internal design pressure, psi
R = inside radius, in.
S = allowable stress at design temperature, psi (Section II, Part D) = 20,000 psi
E = lower of weld joint efficiency or ligament efficiency (fully radiographed with manual penetrations) = 1.0

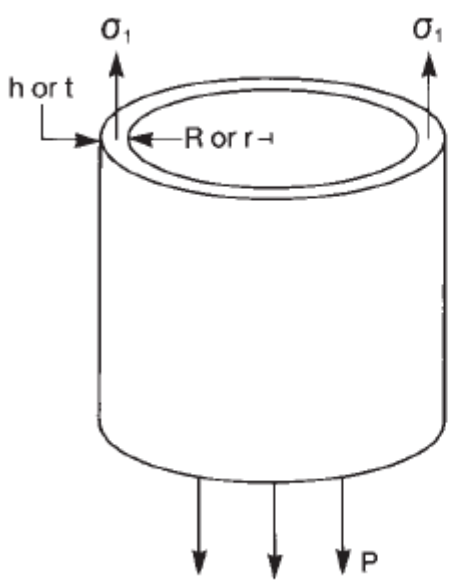

Axial Stress

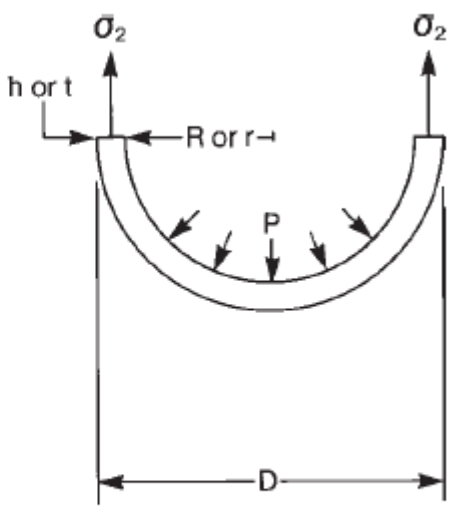

Hoop or
Circumferential Stress

Steam Drum

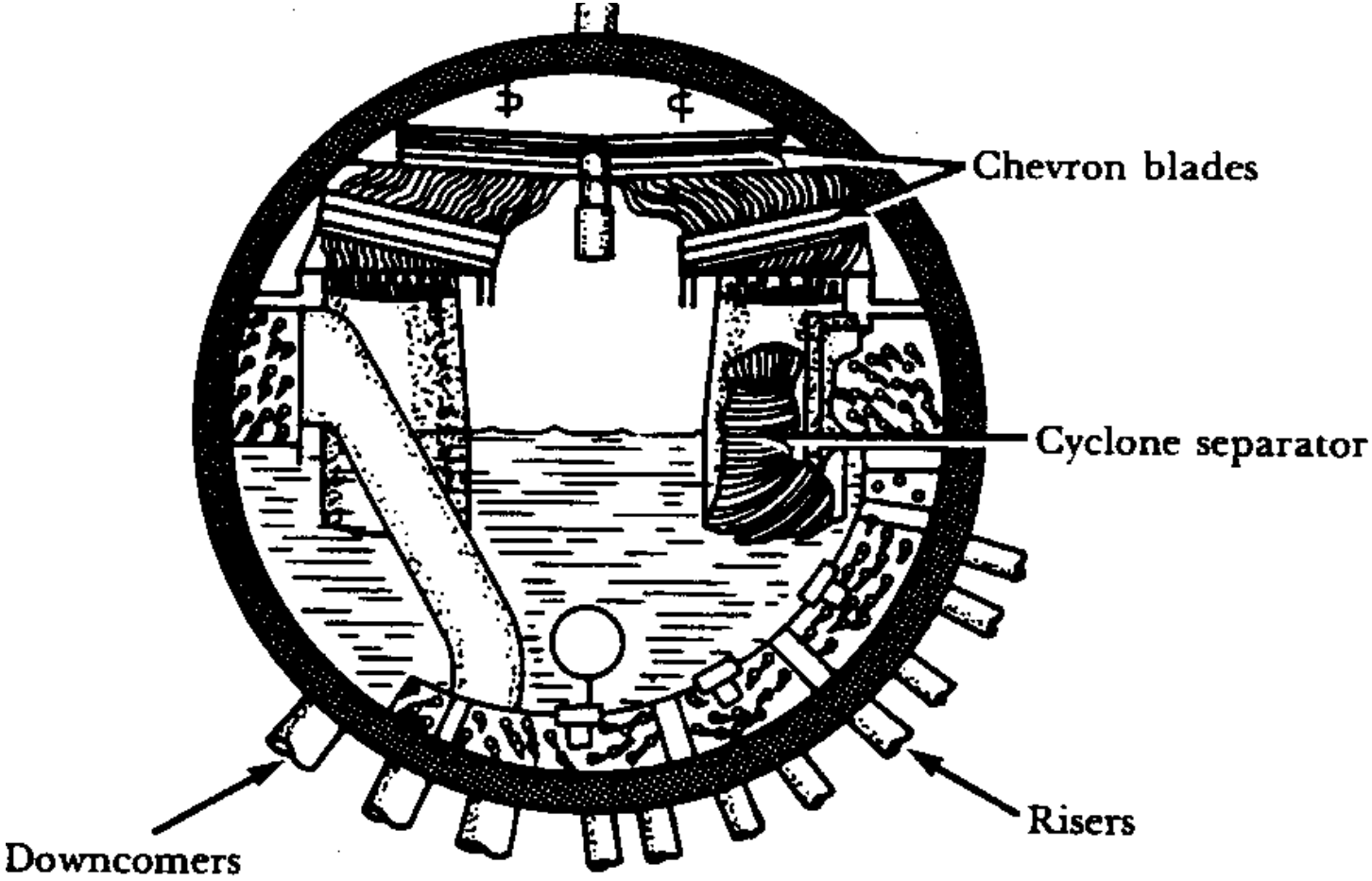

Steam Drum and separators